MPC5604B Nexus Emulation Adapter 208BGA – 64TQ

Ordering code	IA208BGA64TQ-5604B

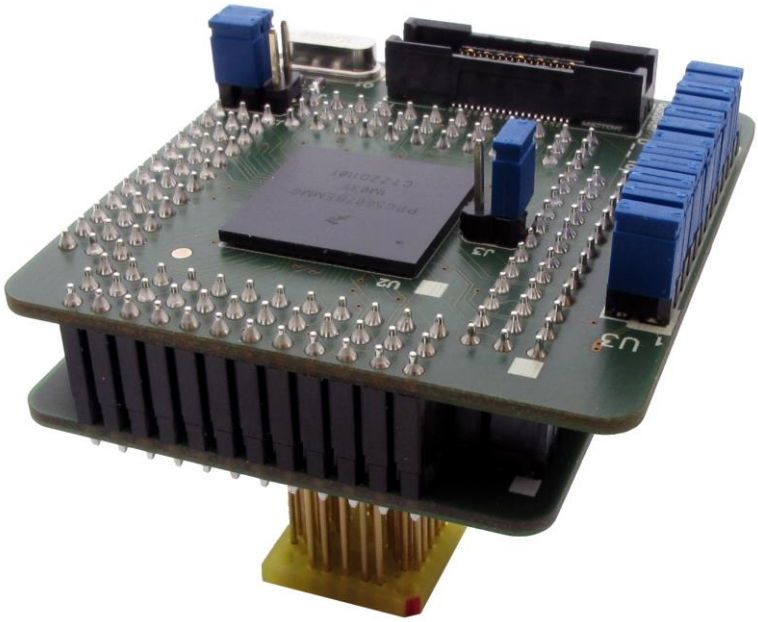

Supported microcontrollers:

- Freescale MPC5602B, MPC5603B and MPC5604B
- ST equivalent devices (SPC560B40, SPC560B50)

Target CPU package: QFP64

Original microcontroller in the QFP64 package has no Nexus port at all which may be a significant drawback during the development and test process.

“Bolero” Nexus Emulation Adapter is based on the MPC5607B microcontroller in the BGA208 package (emulation device), which also exposes 4-bit Nexus port. The emulation adapter exhibits the same behaviour to the target as the original 64-pin microcontroller and additionally provides the Nexus port, which allows advanced functionalities like trace, profiler and code coverage.

If the project is based on MPC5601D or MPC5602D (ST equivalents SPC560D30, SPC560D40), which have no “umbrella” device exposing Nexus trace port, a user can conditionally use this emulation adapter with some restrictions respectively application adjustments. The emulation adapter is based on Freescale MPC5607B featuring 512kB internal flash, which is different to the 256kB internal flash of the MPC6501D and MC5602D. When programming data (or program) flash through the application, this will not work when the application is written for MPC6501D and MC5602D unless libraries for

512kB internal flash are used during the development and test with the emulation adapter. The same applies for the debug download, where MPC5607B must be selected as the target device when programming program or data flash through the debugger.

A 64-pin solder part, which must be ordered separately under the IA64ATQ-SOLDER ordering code, is soldered to the target (PCB) instead of populating the original microcontroller in a 64-pin QFP package. Then the Emulation Adapter, which acts as the original microcontroller and additionally provides debug Nexus port, is connected on top.

Contact iSYSTEM sales representative for more details on available Nexus tools.

All 64 pins of the “emulated” target microcontroller are accessible around the 208-pin “emulation” device. When certain target microcontroller signal needs to be inspected e.g. by an oscilloscope, below description helps locating it.

Pin 1 marker

							61		57		51					
			63				62		58	55	52	49				
1	2		64							56		50				
														48	47	46
		3												45	44	
	4															
5		6														
7	8	9														
10	11	12												43	42	
														41		40
13															39	
14	15													38		
		16													37	36
			19	22	25	28	31						32	35	34	33
				21	24	27	30									
		17	18	20	23	26	29									

64-pin layout – emulation adapter top view

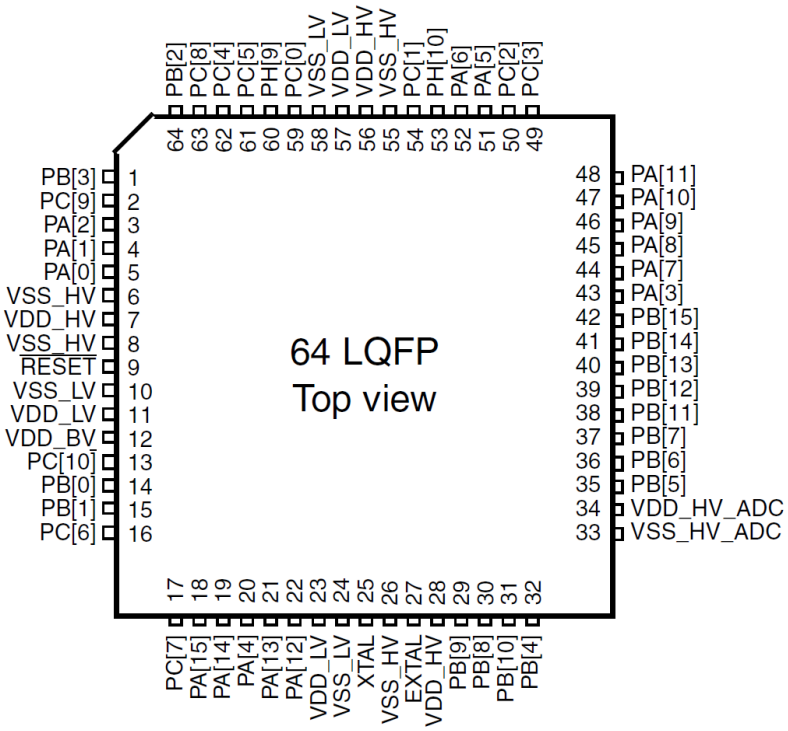

Target microcontroller MPC560xB – 64 LQFP pin configuration

Dimensions

(Unit : mm)	A	B	C	D	E	F	G	H	X	Y
IA208BGA64TQ-5604B	54 x 54	46 x 46	16 x 16	7.5	25	36	47	55	12	1.5

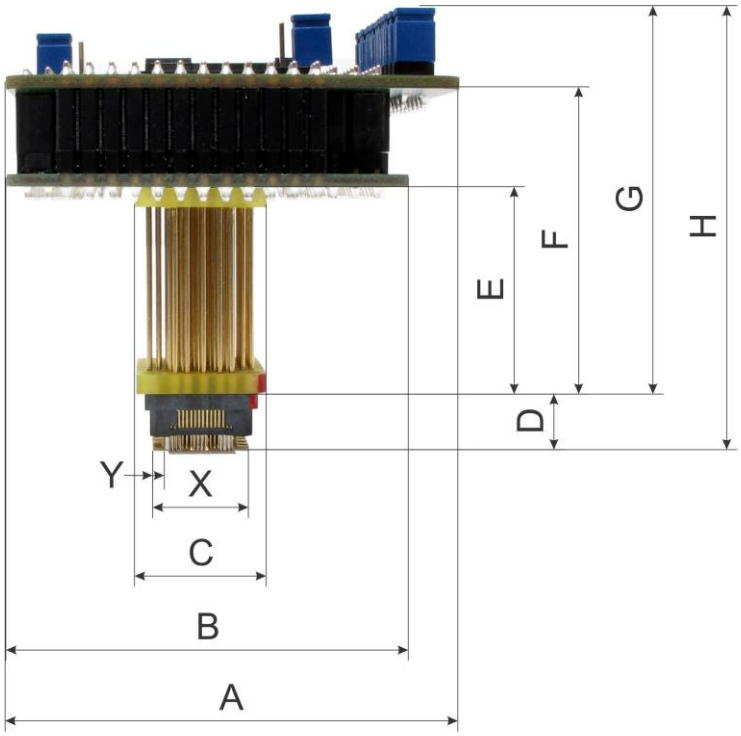

IA208BGA64TQ-5604B dimensions

- **IA64ATQ-SOLDER**

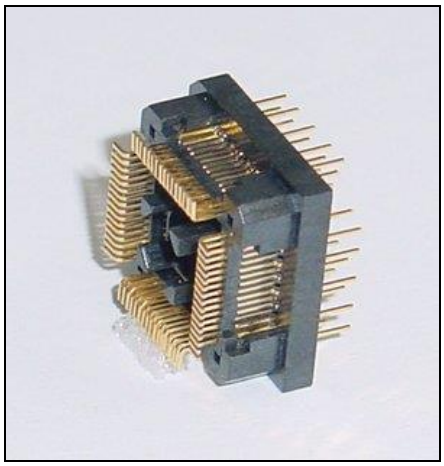

Solder part, which is being soldered to the target.

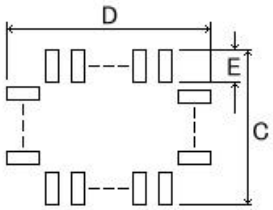

(Unit: mm)						
A	B	C	D	E	K	L
12	1.505	13.0	13.0	2.3	14	14

Recommended (by TET) PCB footprint size

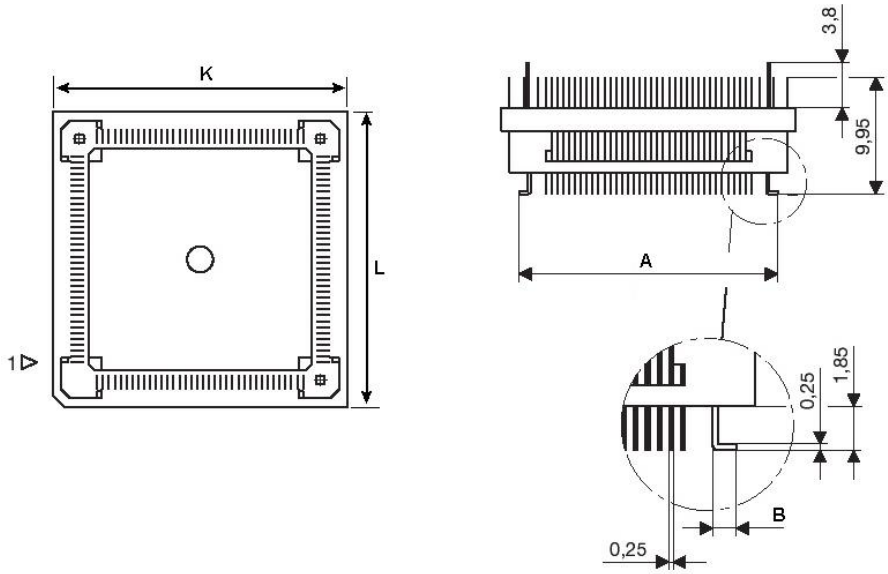

IA64ATQ-SOLDER dimensions

User must be familiar with the SMT (Surface Mount Technology) soldering in order to solder the IA64ATQ-SOLDER to the PCB instead of the original microcontroller. On request, iSYSTEM can provide this service too.

Jumper configuration

J1 and J2: clock source configuration

Jumpers J1 and J2 select clock source for the emulation device. Per default, both jumpers are set to position 1-2, which yields clock source being used from the emulation adapter.

For the first time after receiving the emulation adapter, it is recommended that it's tested with this setting. Once it's confirmed that is operational, target clock use (J1 & J2 position 2-3) can be tested.

Note that the emulation adapter may not operate when crystal circuit is used in the target. Typical design guideline is that a crystal should be as close as possible to the microcontroller. However, it may happen that the target crystal may not oscillate with the emulation adapter since clock lines (XTAL, EXTAL) between the target and the emulation device on the emulation adapter are prolonged. There should be no problem with the oscillator being used in the target.

If an oscillator in the target is not an option and the target crystal doesn't oscillate in conjunction with the emulation adapter, clock from the emulation adapter must be used (J1 & J2 position 1-2). In this case, a crystal circuit must be assembled on the emulation adapter.

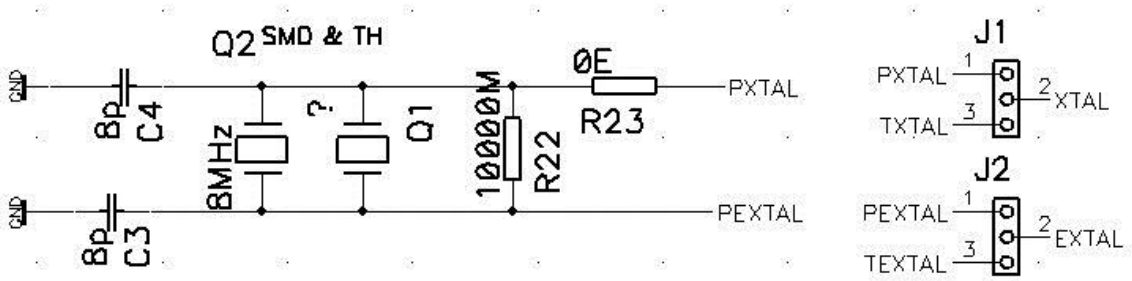

Crystal circuit

Note: Above schematic shows two crystals Q1 and Q2. This is only for the PCB design, which is ready for SMT and through-hole crystal. Physically one crystal only is populated.

Crystal circuit is located in the corner of the emulation adapter, next to the Nexus (Mictor) connector.

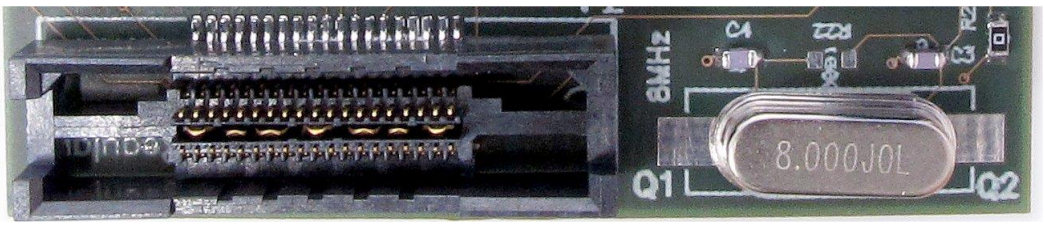

Per default 8pF capacitors are populated for C3 and C4, 0Ω resistor for R23 and 8MHz crystal for Q1. R22 must not be populated. Note that these values are valid for 8MHz crystal only. If different crystal is used, appropriate capacitors and resistor must be soldered (replace original ones).

J3: target reset configuration

Jumper J3 connects the reset line between the emulation device and the target. By default J3 is not populated.

U3: power selection

The U3 header row is used for power supply selection. Power supplies are organized in groups and the same voltage must be supplied for each group.

Refer to the microcontroller user manual for more details which power supply designation belongs to which power supply.

By default all jumpers are set even though only first four jumpers (connecting pins 1-2, 3-4, 5-6, 7-8) affects the configuration. When jumpers are set, target power supply coming from the target gets connected to the microcontroller residing on the emulation adapter. If a different power source is to be used (e.g. in case of a standalone operation), jumpers must be removed and power source must be applied to CVDD_HV_ADC1 (pin 2), CVDD_HV_ADC0 (pin 4), CVDD_BV (pin 6), CVDD_HV (pin 8) and GND (pins 21-26) signals.

Signal direction	Signal	Pin	Pin	Signal	Signal direction
target	TVDD_HV_ADC1	1	2	CVDD_HV_ADC1	CPU
target	TVDD_HV_ADC0	3	4	CVDD_HV_ADC0	CPU
target	TVDD_BV	5	6	CVDD_BV	CPU
target	TVDD_HV	7	8	CVDD_HV	CPU
	NC	9	10	NC	
	NC	11	12	NC	
	NC	13	14	NC	
	NC	15	16	NC	
	NC	17	18	NC	
	NC	19	20	NC	
	GND	21	22	GND	
	GND	23	24	GND	
	GND	25	26	GND	

U3 signal description

iSYSTEM power supply adapter can be ordered separately under the IEA-PS ordering code. It connects on top of the emulation adapter directly to the U3 header row and allows standalone usage of the emulation adapter. 3.3V or 5V voltage can be selected for each group with appropriate jumpers J0-J9. This is convenient when the target is not available or it’s not adjusted for the emulation adapter connection yet.

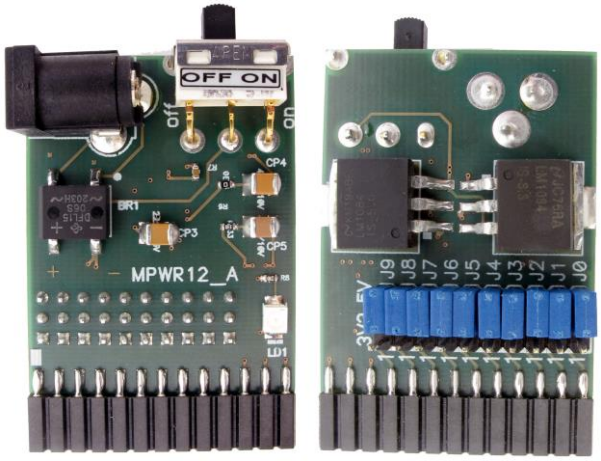

IEA-PS (optional emulation adapter power supply)

Schematic

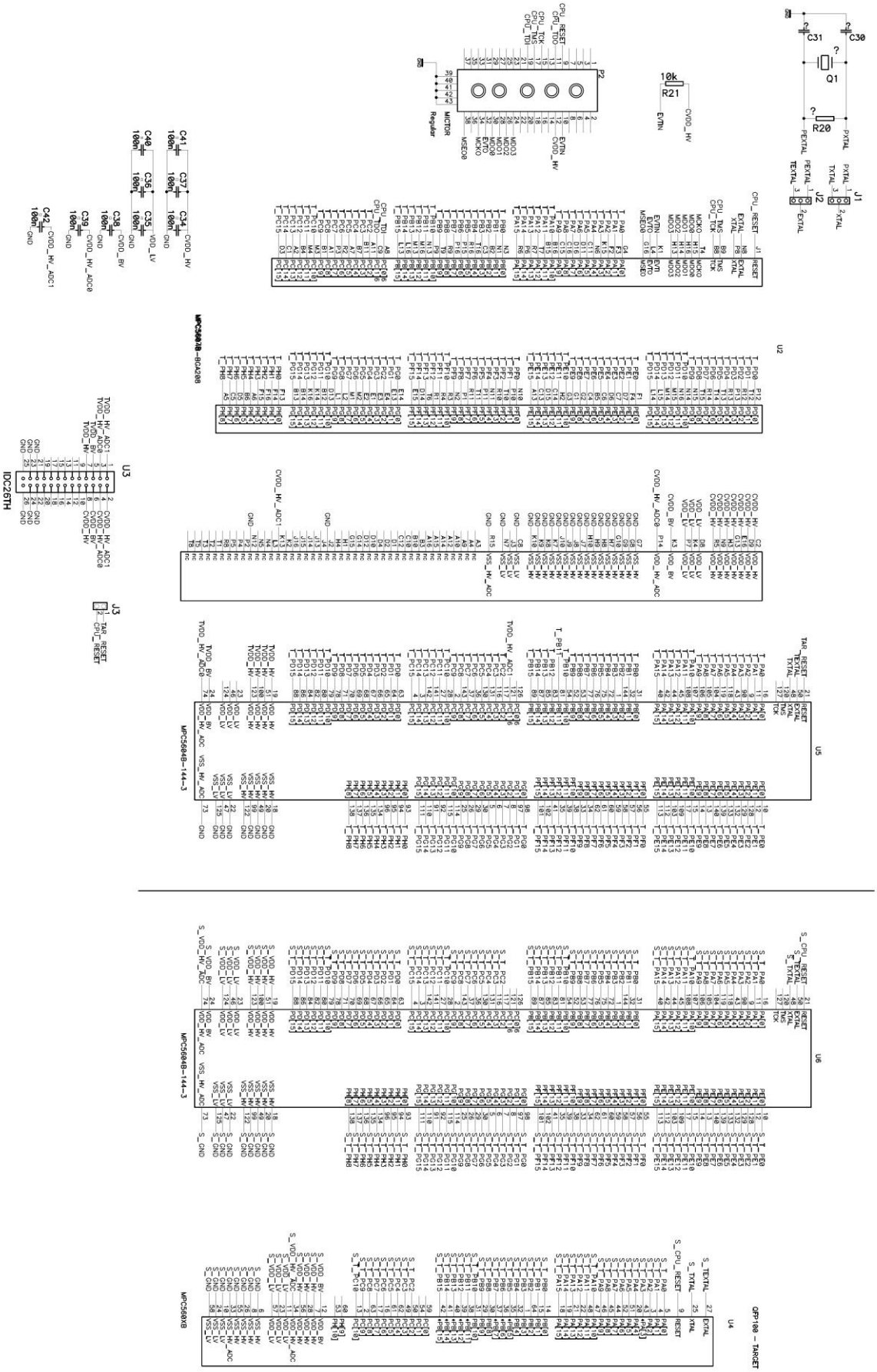
J1
J2
C30
C31
Q1
R20
R21
10k
P2
Regulator
U2
U3
U4
U5
U6
J3
IDC26TH
MPC5604B-144-3
MPC5604B-BGA208
MPC5604B
QFP100 - TARGET