“Leopard” Nexus Emulation Board 257BGA – 100TQ

Ordering code	IA257BGA100TQ-564XL

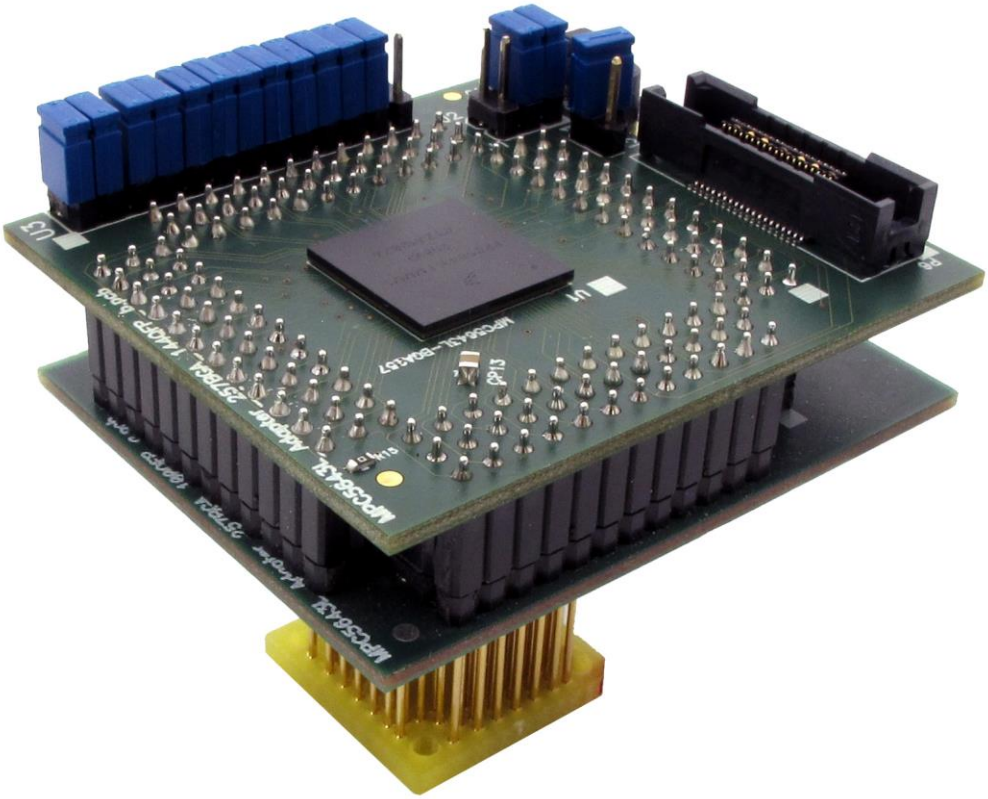

Target CPU package: QFP100

Original microcontroller in the QFP100 package has no Nexus port at all which may be a significant drawback during the development and test process.

“Leopard” Nexus Emulation Adapter is based on the MPC5643L microcontroller in the BGA257 package (emulation device), which also exposes 12-bit Nexus port. The Emulation Adapter exhibits the same behaviour to the target as the original 100-pin microcontroller and additionally provides the Nexus port, which allows advanced functionalities like trace, profiler and code coverage.

A 100-pin solder part, which must be ordered separately under the IA100TQ-SOLDER ordering code, is soldered to the target (PCB) instead of populating the original microcontroller in a 100-pin QFP package. Then the Emulation Adapter, which acts as the original microcontroller and additionally provides debug Nexus port, is connected on top.

Contact iSYSTEM sales representative for more details on available Nexus tools.

All 100 pins of the “emulated” target microcontroller are accessible around the 257-pin “emulation” device. When certain target microcontroller signal needs to be inspected e.g. by an oscilloscope, below description helps locating it.

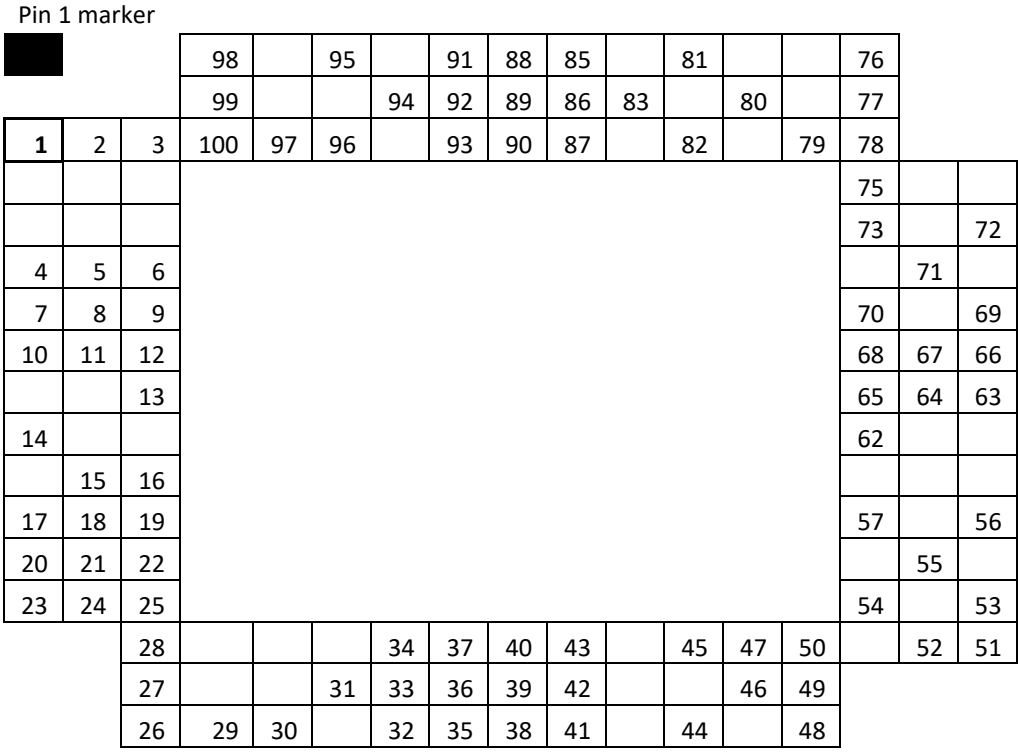

100-pin layout – emulation adapter top view

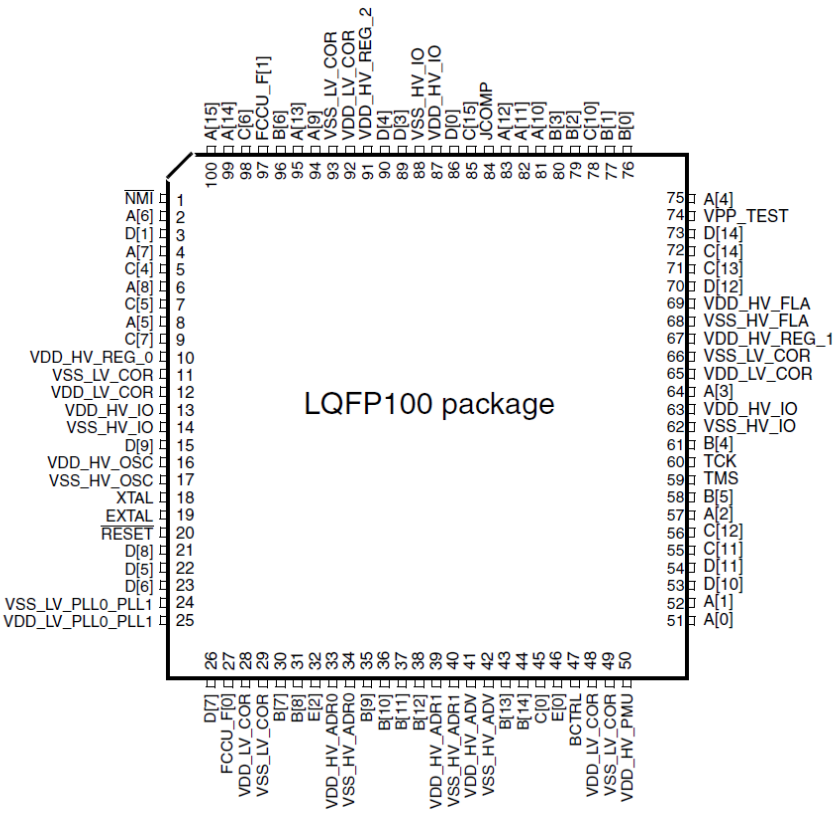

Target microcontroller SPC56EL60 – 100 LQFP pin configuration

- **IA100TQ-SOLDER**

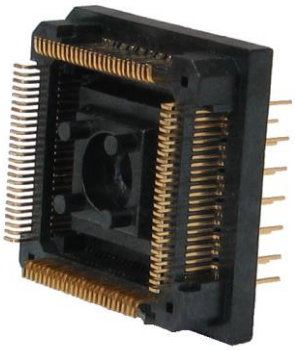

Solder part, which is being soldered to the target.

PCB footprint size recommended by TET:

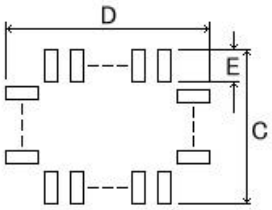

(Unit: mm)						
A	B	C	D	E	K	L
16.5	1.125	17.0	17.0	2.15	19.55	19.55

When it's meant soldering the solder part manually, it's highly recommended prolonging the dimension E on the outer side (e.g. for 1.5-2 mm) during the PCB design. Note that without this modification it's very difficult to solder the solder part manually.

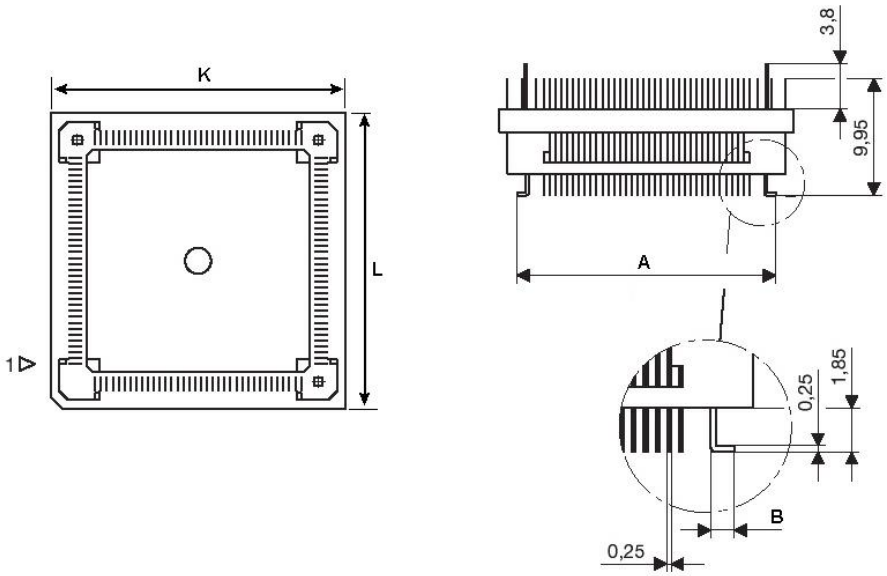

IA100TQ-SOLDER dimensions

Jumper configuration

J1 and J2: clock source configuration

Jumpers J1 and J2 select clock source for the emulation device. Per default, both jumpers are set to position 1-2, which yields clock source being used from the emulation adapter.

For the first time after receiving the emulation adapter, it is recommended that it's tested with this setting. Once it's confirmed that it is operational, target clock use (J1 & J2 position 2-3) can be tested.

Note that the emulation adapter may not operate when crystal circuit is used in the target. Typical design guideline is that a crystal should be as close as possible to the microcontroller. However, it may happen that the target crystal may not oscillate with the emulation adapter since clock lines (XTAL, EXTAL) between the target and the emulation device on the emulation adapter are prolonged. There should be no problem with the oscillator being used in the target.

If an oscillator in the target is not an option and the target crystal doesn't oscillate in conjunction with the emulation adapter, clock from the emulation adapter must be used (J1 & J2 position 1-2). In this case, a crystal circuit must be assembled on the emulation adapter.

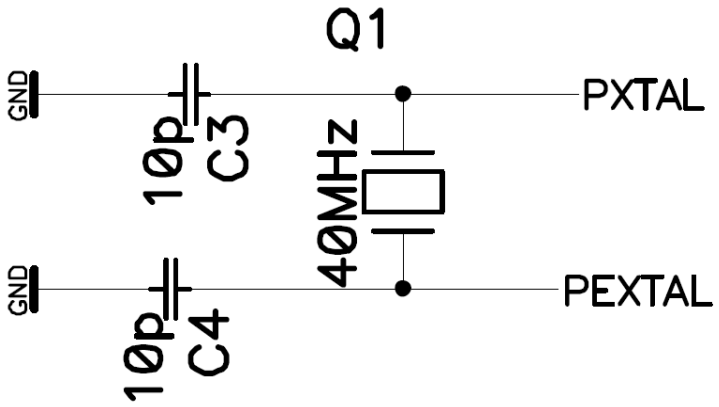

Crystal circuit

Crystal circuit is located in the corner of the emulation adapter, next to the Nexus (Mictor) connector.

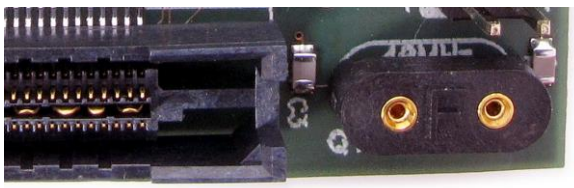

Per default 10pF capacitors are populated for C3 and C4 and 40MHz crystal for Q1. Note that these values are valid for 40MHz crystal only. If different crystal is used, appropriate capacitors must be soldered (replace original ones).

Note: It has been confirmed that some quartz crystals don't generate sufficient clock amplitude for the MPC564xL microcontroller operation. Freescale MPC564xL reference design uses the NX5032GA quartz and no problems have been noticed with the emulation adapter when using this particular type.

J3: target reset configuration

Jumper J3 connects the reset line between the emulation device and the target. By default J3 is not populated.

U3: power selection

The U3 header row is used for power supply selection. Power supplies are organized in groups and the same voltage must be supplied for each group.

Refer to the microcontroller user manual for more details which power supply designation belongs to which power supply.

Signal direction	Signal	Pin	Pin	Signal	Signal direction
	NC	1	2	NC	
Target	VDD_HV_REG	3	4	CVDD_HV_REG	CPU
Target	VDD_HV_PMU	5	6	CVDD_HV_PMU	CPU
Target	VDD_HV_FLA	7	8	CVDD_HV_FLA	CPU
Target	VDD_HV_ADV	9	10	CVDD_HV_ADV	CPU
Target	VDD_HV_ADR1	11	12	CVDD_HV_ADR1	CPU
Target	VDD_HV_ADR0	13	14	CVDD_HV_ADR0	CPU
Target	VDD_HV_OSC	15	16	CVDD_HV_OSC	CPU
Target	VDD_HV_IO	17	18	CVDD_HV_IO	CPU
	NC	19	20	NC	
	GND	21	22	GND	
	GND	23	24	GND	
	GND	25	26	GND	

U3 signal description

By default all jumpers are set even though only eight jumpers (connecting pins 3-4, 5-6, 7-8, 9-10, 11-12. 13-14, 15-16, 17-18) affects the configuration. When jumpers are set, target power supply coming from the target gets connected to the microcontroller residing on the emulation adapter. If a different power source is to be used (e.g. in case of a standalone operation), jumpers must be removed and power source must be applied to CVDD_HV_REG (pin 4), CVDD_HV_PMU (pin 6), CVDD_HV_FLA (pin 8), CVDD_HV_ADV (pin 10), CVDD_HV_ADR1 (pin 12), CVDD_HV_ADR0 (pin 14), CVDD_HV_OSC (pin 16), CVDD_HV_IO (pin 18) and GND (pins 21-26) signals.

iSYSTEM emulation adapter power supply adapter (ordering code: IEA-PS), which can provide 3.3V or 5V voltage, connects on top of the emulation adapter directly to the U3 header row and allows standalone usage of the emulation adapter. This is convenient when the target is not available or it's not adjusted for the emulation adapter connection yet.

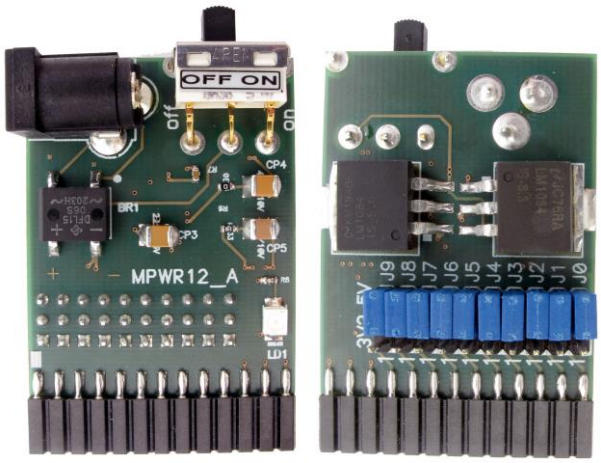

IEA-PS (optional emulation adapter power supply

Notes:

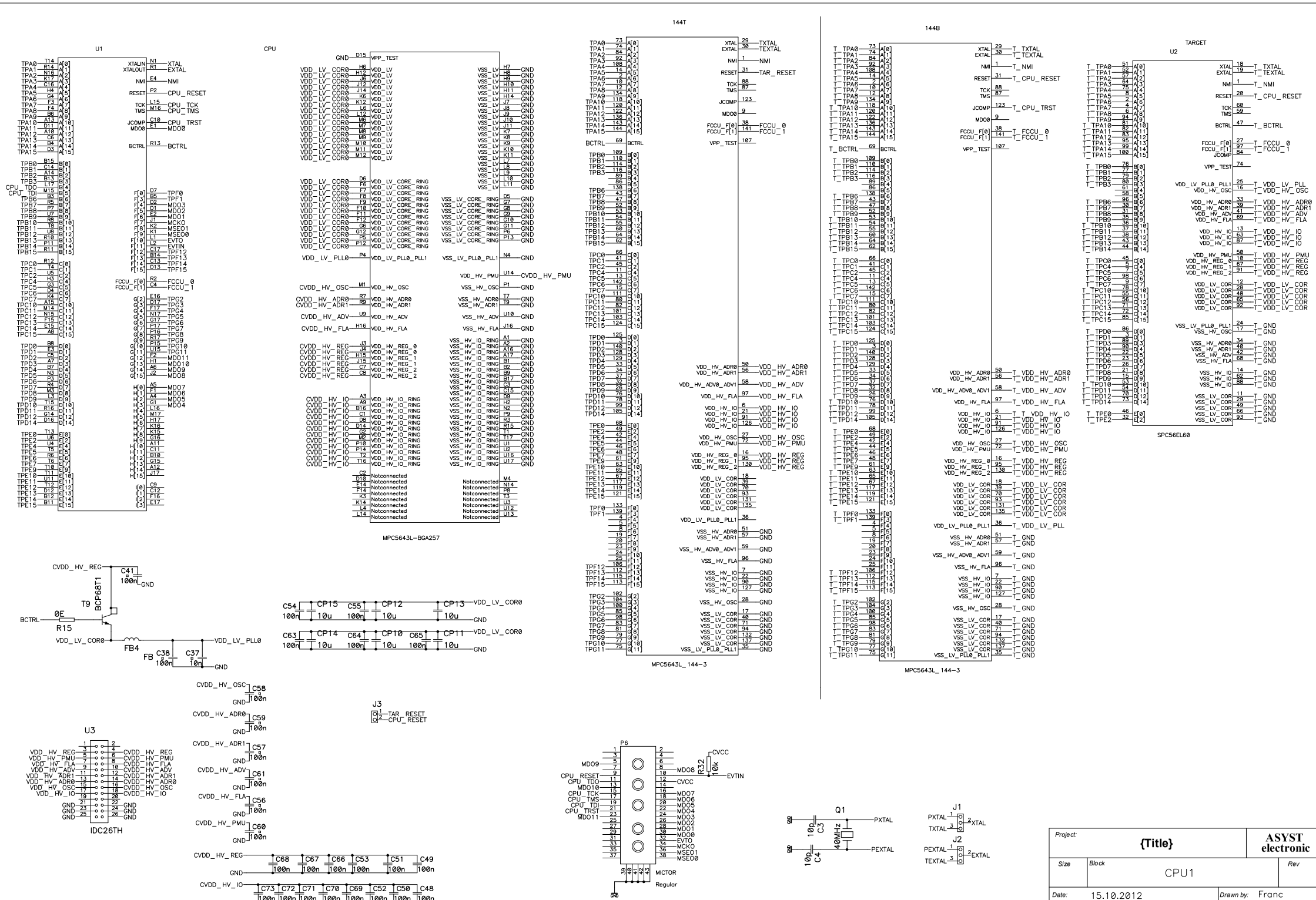
U1
CPU
MPC5643L-BGA257
144T
MPC5643L_144-3
144B
MPC5643L_144-3
TARGET
U2
SPC56EL60
T9
BCP68T1
R15
FB4
U3
IDC26TH
J3
TAR_RESET
CPU_RESET
P6
MICTOR
Regular
Q1
J1
J2
Project:
{Title}
ASYST electronic
Size
Block
CPU1
Rev
Date:
15.10.2012
Drawn by:
Franc
Filename:
MPC5643L_Adapter_257BGA_144QFP_v.sch
Sheet: